Ruggedized Lens

Xenoplan 1.9/35 - Ruggedized

In accordance with the sensitivity of modern 2 / 3“ CCD and CMOS sensors, the 3 megapixel lenses are corrected and broadband-coated for the spectral range of 400 – 1000 nm (VIS + NIR). Even under production and / or extreme conditions, the robust mechanical design with lockable focus and iris setting mechanism guarantees reliable continuous use in which the set optical parameters remain in place.

Xenoplan 1.9/35

Key Features

- High-resolution optics
- Stabilized mechanism
- Highest optical imaging performance even with smallest pixel sizes
- Broadband coating (400 - 1000 nm)
- Compact and low weight
- Vibration insensitivity for stable imaging performance, secured ring
- Focus and iris setting lockable

Applications

- 3D measurement
- Machine Vision and other imaging applications
- Traffic
- Medical
- Robot vision
- Food processing

Technical Specifications

F-number	1.9
Focal length	34.9 mm
Image circle	11 mm
Transmission	400 - 1000 nm
Interface	C-Mount
Weight	92 gr.
Option	Optical filter

Contact

Jos. Schneider Optische Werke GmbH
Ringstraße 132
55543 Bad Kreuznach
Germany
Phone +49 671 601-205
Fax +49 671 601-286
www.schneiderkreuznach.com
industrie@schneiderkreuznach.com

Schneider Optical Technologies Co., Ltd.
Rm. A505 Yingdali Science Park, Hongmian Rd.,
Futian Free Trade Zone, Shenzhen 518038,
P.R. China
Phone: +86 755 88 32 11 70
Fax: +86 755 88 32 11 75
www.schneiderkreuznach.com
info@schneider-asiapacific.com

Schneider Optics Inc.
285 Oser Ave.
Hauppauge, NY 11788
USA
Phone +1 631 761-5000
Fax +1 631 761-5090
www.schneideroptics.com/industrial
industrial@schneideroptics.com

Jos. Schneider Optische Werke GmbH is certified ISO 9001. | We accept no responsibility for any errors and reserve the right of modification without further notice.

Version 2.0, 20.11.2008 | © 2012 Jos. Schneider Optische Werke GmbH

Xenoplan 1.9/35 Ruggedized Lens

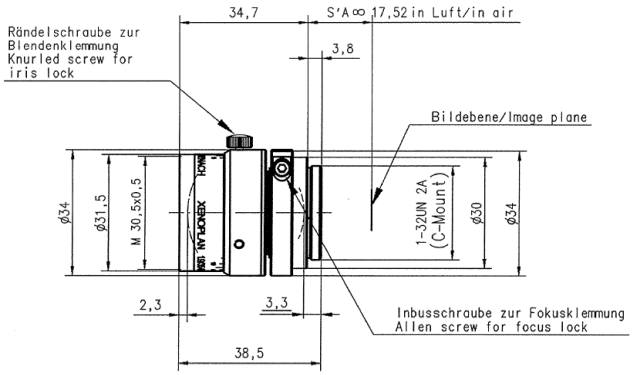

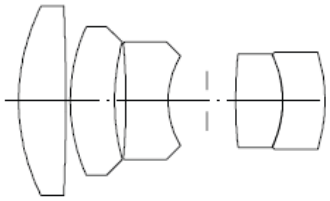

XENOPLAN 1.9/35MM

f'	=	34.9 mm	β'_P	=	0.879
s_F	=	-6.5 mm	s_{EP}	=	33.3 mm
$s'_{F'}$	=	17.0 mm	s'_{AP}	=	-13.7 mm
HH'	=	-13.8 mm	Σd	=	32.6 mm

XENOPLAN 1.9/35MM

MODULATION with reference to the relative image height

Wavelength λ [nm] :	555	655	605	505	455	405
Spectral weighting [%] :	19.6	23.7	22.2	15.7	12.1	6.7
Spatial frequency R [1/mm] :	10	20	30			
Format [mm X mm] :	6.6 X 8.8					
Diagonal 2u' [mm] :	11.0					

radial ——
tangential — —

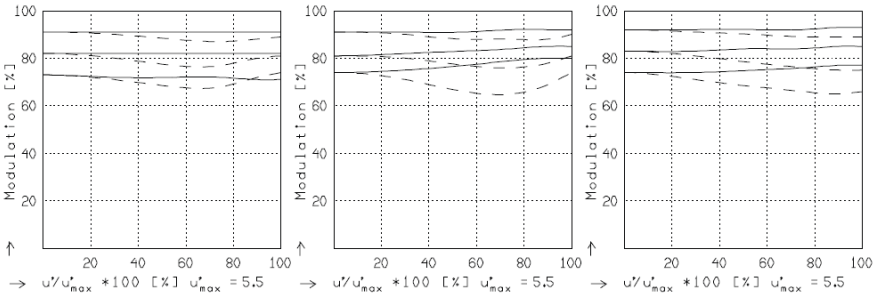

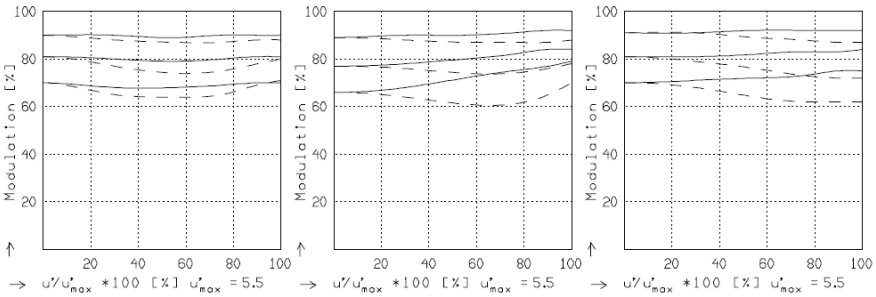

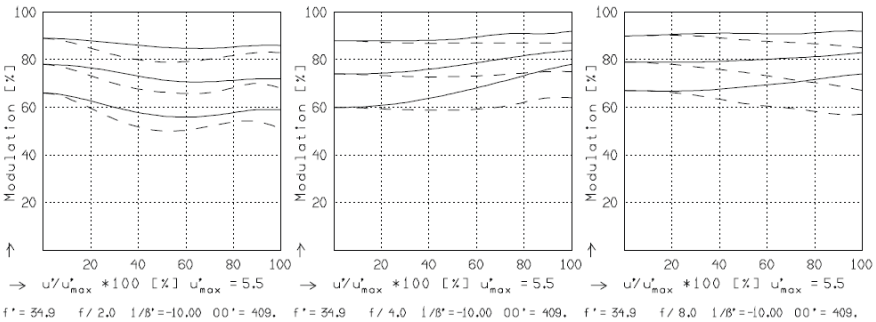

Focusing : MTF_{max} at f / 1.9 , R = 30 1/mm, u'/u'_{max} = 0

Version 2.0, 20.11.2008 | © 2012 Jos. Schneider Optische Werke GmbH

Xenoplan 1.9/35 Ruggedized Lens

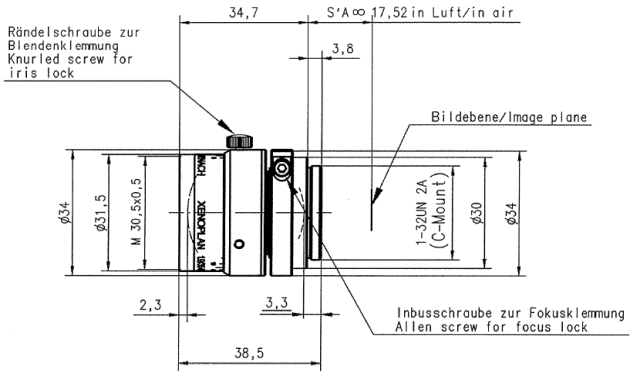

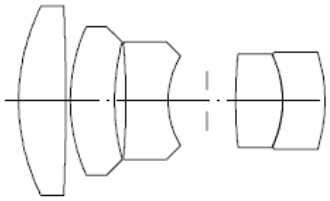

XENOPLAN 1.9/35MM

f'	=	34.9 mm	β'_P	=	0.879
s_F	=	-6.5 mm	s_{EP}	=	33.3 mm
$s'_{F'}$	=	17.0 mm	s'_{AP}	=	-13.7 mm
HH'	=	-13.8 mm	Σ d	=	32.6 mm

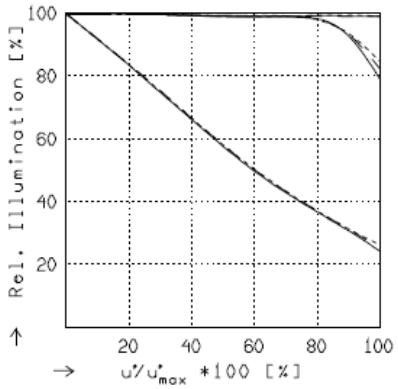

RELATIVE ILLUMINATION

The relativ illumination is shown for the given focal distances or magnifications.

	f / 1.9	f / 4.0	f / 8.0
——	β' = -0.0200	u'_{max} = 5.5	OO' = 294.
— —	β' = -0.0333	u'_{max} = 5.5	OO' = 195.
-----	β' = -0.0500	u'_{max} = 5.5	OO' = 145.

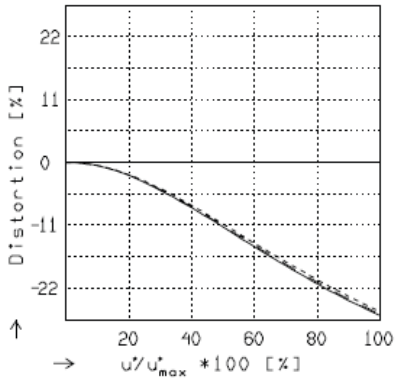

DISTORTION

Distortion is shown for the given focal distances or magnifications. Positive values indicate pincushion distortion and negative values barrel distortion.

——	β' = -0.0200	u'_{max} = 5.5	OO' = 294.
— —	β' = -0.0333	u'_{max} = 5.5	OO' = 195.
-----	β' = -0.0500	u'_{max} = 5.5	OO' = 145.

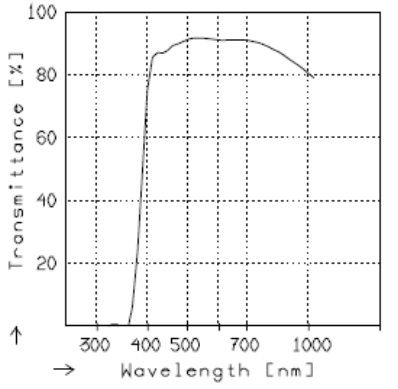

TRANSMITTANCE

Relative spectral transmittance is shown with reference to wavelength.

Version 2.0, 20.11.2008 | © 2012 Jos. Schneider Optische Werke GmbH